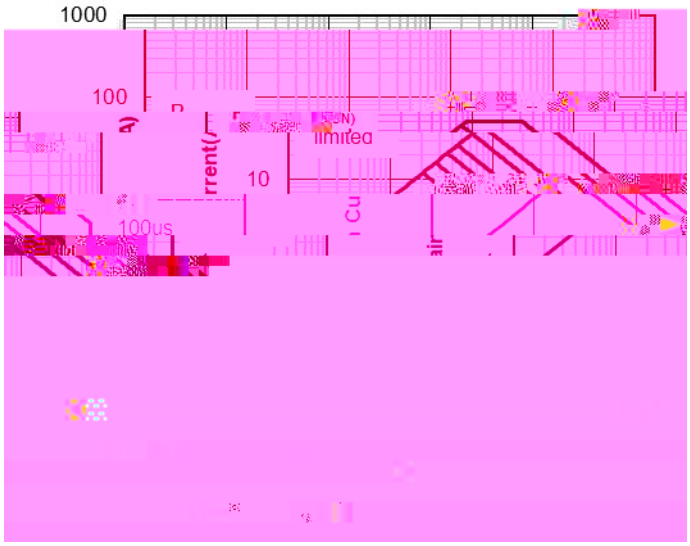
1000
100
10
limited
100us

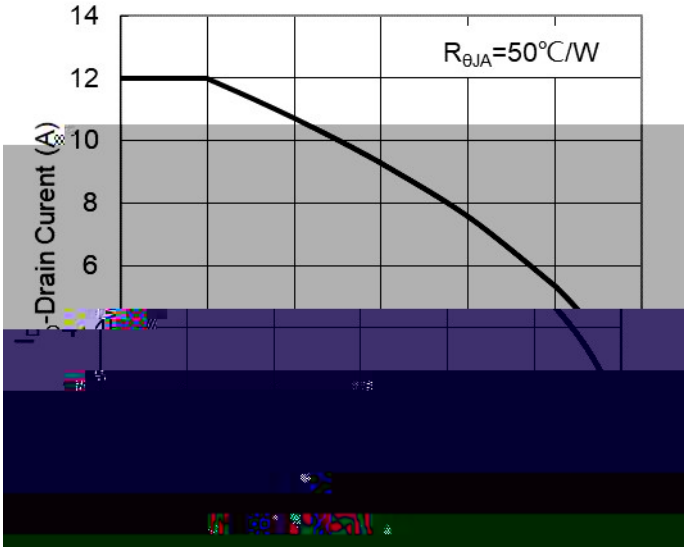
14
12
10
8
6
$R_{\theta JA}$=50℃/W
-Drain Curent (A)

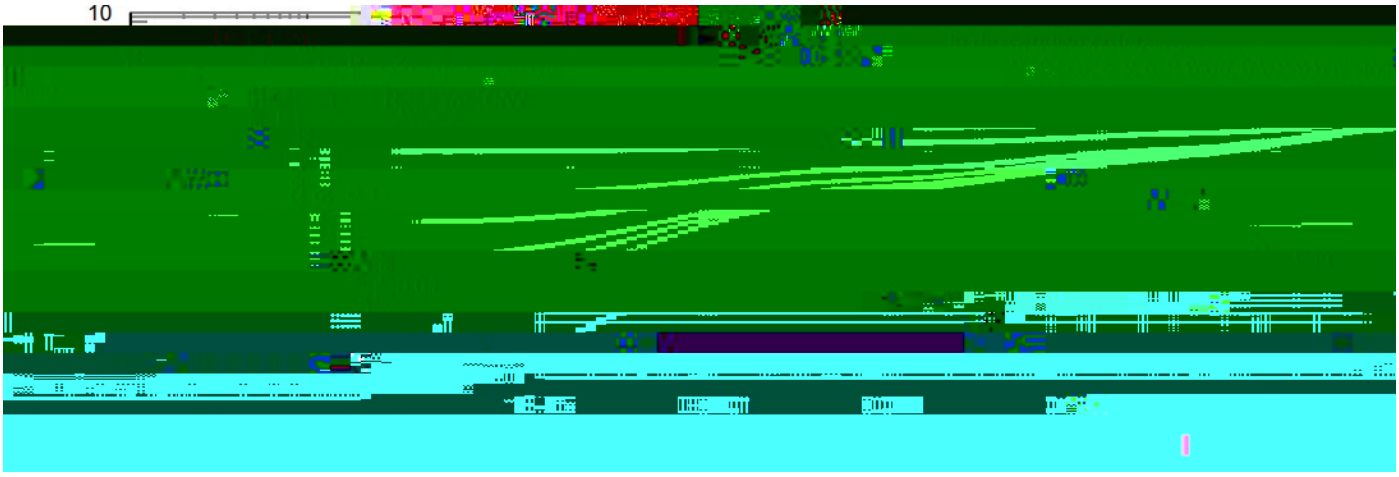
10

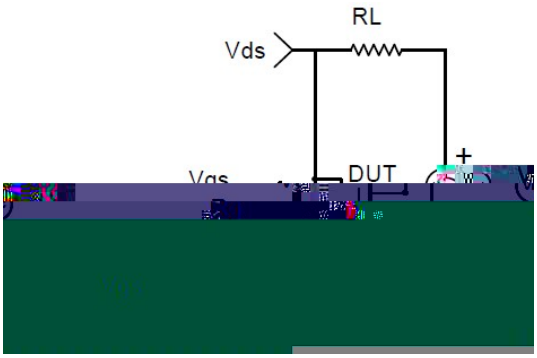
RL
Vds
DUT
+

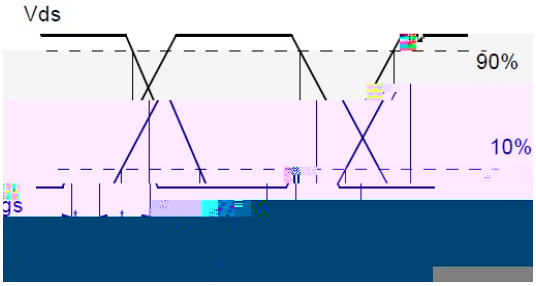
Vds
90%
10%

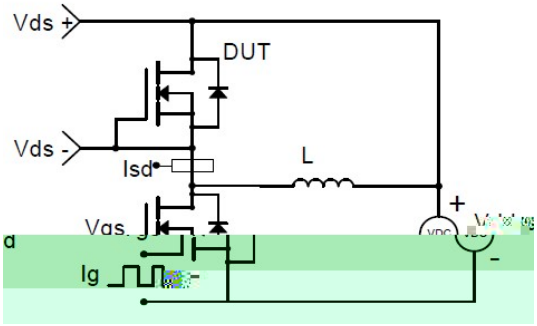
Vds +
DUT
Vds -
Isd
L
+
Ig
-

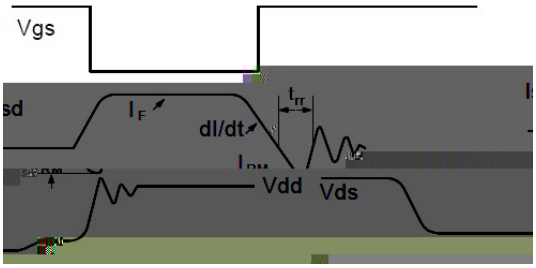
Vgs
dI/dt
Vdd
Vds

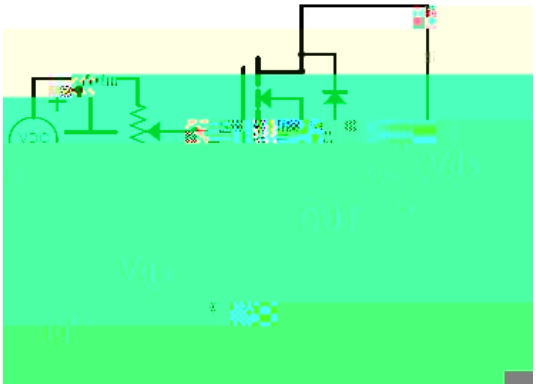

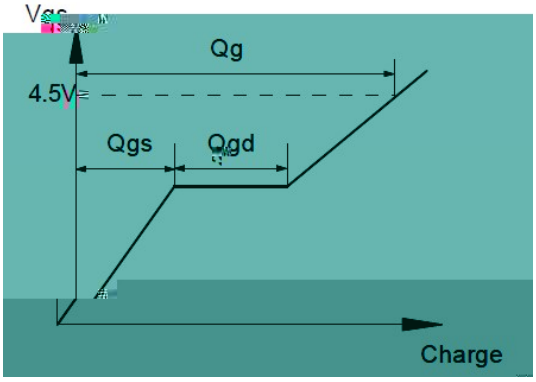
Qg
4.5V
Qgs
Qgd
Charge

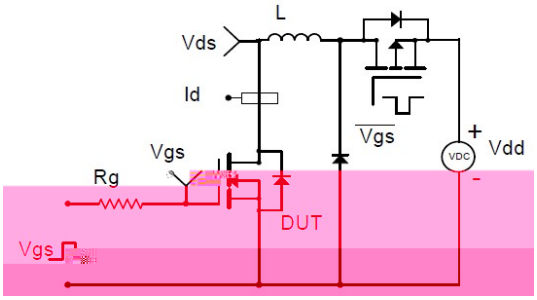
L
Vds
Id
Vgs
Rg
DUT
Vgs
+
Vdd
-

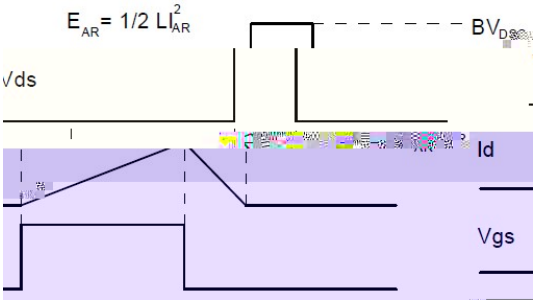
E_AR = 1/2 LI²_AR
BV_DSS
Vds
Id
Vgs

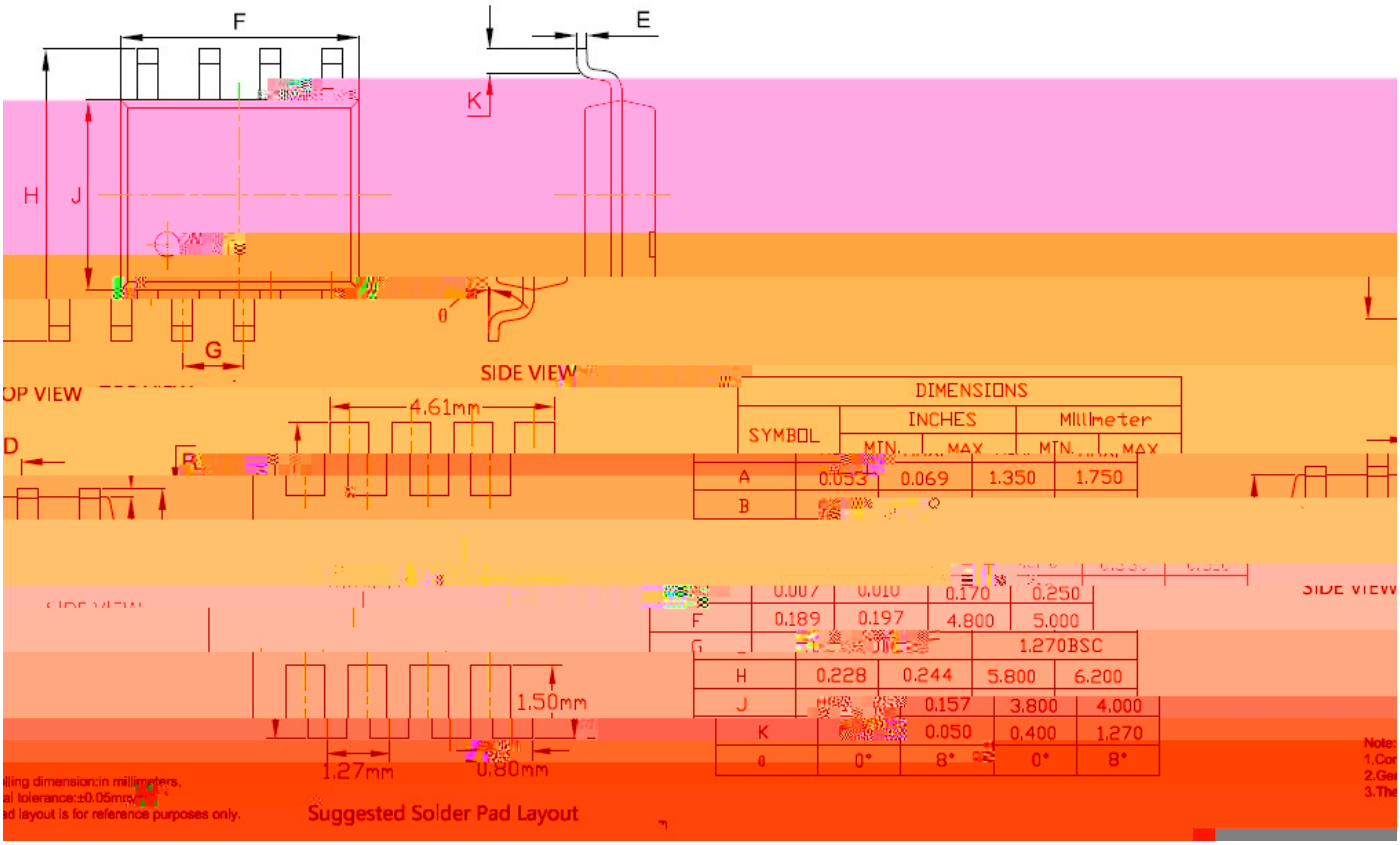

SYMBOL	DIMENSIONS			
	INCHES		Millimeter	
	MIN.	MAX	MIN.	MAX
A	0.053	0.069	1.350	1.750
B	[illegible]			
	0.007	0.010	0.170	0.250
F	0.189	0.197	4.800	5.000
G	[illegible]		1.270BSC	
H	0.228	0.244	5.800	6.200
J	[illegible]	0.157	3.800	4.000
K	[illegible]	0.050	0.400	1.270
θ	0°	8°	0°	8°